Electronic Panel Meters
DIGEM – Preference Program

- Process control, automation & laboratory uses
- Class 0.01 to 1
- Current, Voltage, Frequency, Temperature, RPM, Pressure, etc.
- LED/LCD displays
- Display 1999 to 99999 digits (3½ to 5 digits)
- DIN 43700 panel mounting cases

GMW GOSSEN Müller & Weigert

Electronic Panel Meters

Process control, automation & laboratory uses

This catalogue gives you an overview of our preference program. You have a selection from a complete program of electronic panel meters.

The modern product palette is carefully selected on the requirements of measurement and display technologies, systems design and assembly technologies.

GOSSEN Müller & Weigert panel meters fulfil all requirements of the European EMC guidelines without any restrictions.

You receive invariable high quality products that are constantly controlled by a strict quality control system.

	DIGEM 48 x 24 AK5	DIGEM 96 x 24 B5	DIGEM 96 x 24 BK5	DIGEM 96 x 24 S5	DIGEM
Type	A1125	A1375	A1275	A1215	A1235
Mechanical Data* Page	4	5	6	7	8
Front panel dimensions / mm	48 x 24	96 x 24	96 x 24	96 x 24	96 x 24
Panel cutout / mm	45 x 22.5	92 x 22.2	92 x 22.2	92 x 22.2	92 x 22.2
Installation depth / mm	93	126	141	72	143
Display (7 Segments)					
Display colour	red / green	red	red / green	red / green	red / green
Character heigh / mm	8	14	14	14	14
– 1.999 ... 1.999 (3½ digits)	•		•	•	
– 1.999 ... 9.999 (4 digits)		•			
– 19.999 ... 19.999 (4½ digits)	opt.		•		
– 19.999 ... 32.765 (4¾ digits)					
– 19.999 ... 99.999 (5 digits)					•
Display range programmable		opt.			•
Decimal point programmable		opt.			•
Graphic Display					
Inputs					
Measurement range card		•	•		
Amount of measurement ranges	1	1	1	max. 4	36
Selection with				Jumper	Keys, SW
Programmable					•
Measuring Functions					
DC voltage / DC current	•/•	•/•	•/•	•/•	•/•
0 ... 20 mA / 4 ... 20 mA	•/•	•/•	•/•	•/•	•/•
AC voltage / AC current		•/•	•/•		•/•
TRMS voltage / RMS voltage		•/–	•/–		
TRMS current / RMS current		•/–	•/–		
Frequency / Pulse counter					
Thermocouple / Pt100		–/•	–/•		•/•
RPM					
Pressure					
Outputs					
Analog output					•
Comparator					2
Limit values (Relay)					
BCD 5 V / 24 V (isolated)					
Interface RS232 / RS485					•/–
Transd. pow. sup. (only for 4 ... 20 mA)		•	•		
Power Supply					
DC 5 V isolated / not isolated				–/•	
DC 24 V / 18 ... 36 V	–/•	–/•	–/•	•/–	
DC 9 ... 60 V / 90 ... 260 V		–/•			
AC 230 V / 115 V				•/–	
AC 24 V / 90 ... 230 V	•/–	•/•	•/•		
AC 230 / 115 V & DC 18 ... 36 V					•
Miscallaneous functions					
Blanking control	•			•	•
Segment test	•		•		
Storage	•	•	•		•
DATA logging					•

* Compulsory dimensional drawing on request

M 96 x 24 MF5	DIGEM 96 x 48 MF5	DIGEM 96 x 48 B5	DIGEM 96 x 48 AK5	DIGEM 96 x 48 MB5	DIGEM 96 x 48 SN5	DIGEM 96 x 48 CK5	DIGEM 144 x 72 C5	DIGEM 62 x 38 A5	DIGEM 62 x 38 B5	DIGEM 72 LCD
A1245	A1385	A1065	A1225	A1255	A1265	A1005	A1155	A1175	A1500	
9	10	11	12	13	14	15	16	17	18	
96 x 48	96 x 48	96 x 48	96 x 48	96 x 48	96 x 48	144 x 72	62 x 38	62 x 38	72 x 72	
92 x 45.5	92 x 45	92 x 45	92 x 45	92 x 22.2	92 x 45	138 x 68	60 x 36	60 x 36	68 x 68	
143	126	130	130	143	130	145	26.5	33	70	
red	red	red / green	red / green	red / green	red / green	red / green	red/green/LCD	red / LCD		
14	14	14	14	14 / 20	14	20	14 / 12.7	10		
		•	•	•			•			
	•									
						•		•		
					•					
•										
•	•				•	•				
•	•				•	•				
									•	
	•				•	•				
36	1	1	max. 4	9	1 or 2	1	1	1		
Keys, SW			DIP / MR	Jumper	Keys					
•										
•/•	•/•	•/•	•/•	•/•	•/•	•/•	•/•	•/•	•/•	
•/•	•/•	•/•		•/•	•/•	•/•	•/•	•/•	•/•	
•/•	•/•	•/•	•/•		•/•	•/•				
•/–	•/–	•/•			•/–	•/–				
•/–	•/–	•/•			•/–	•/–				
		•/–			•/•	•/•				
•/•	–/•	•/•			•/•	–/•				
					•					
					•					
•					•	•	•			
2										
opt. max. 4	2				max. 4	4				
						•/•				
•/•					•/•	•/•				
	•	•			•					
							–/•	–/•		
•/•	–/•	•/–	•/–		–/•	–/•	–/• (opt.)		–/•	
					–/•					
•/•	•/•	•/•	•/•	•/•		•/•				
	•/–	•/–	•/–	•/–	•/•	•/–				
•				•						
•										
		•					•	• (LED)		
•	•	•	opt.		•	•	•	•		
•										

Subject to change without notice

DIGEM 48 x 24 AK5

Digital Indicators for Grid and Mosaic Applications
Type A1125

- Display range ± 1 999 digits, Optionally ± 19 990 digits
- Bright LED-Display with 8 mm character height
- Single standard mounting elements for all grid types
- Suitable for installation into all known grid configurations
- Extremely easy installation
- Power supply electronically separated from measurement circuit, 500 V test voltage

The DIGEM 48 x 24 AK5 panel meter is a 3½ digits display whose casing was especially developed for grid applications.

The included mounting elements allow for installation into all known 24 mm grid systems.

The instrument has a display range of ± 1 999 digits, which can optionally be extended to ± 19 990 digits by setting an additional digit hardwired to zero.

Decimal points are permanently set in the instrument, by means of solder bridges at the display, in accordance with the entries on the serial plate.

With measurements of 48 mm x 24 mm, this instrument can be fitted into practically any grid.

Installation in a control desk is possible because of the shallow installation depth of less than 100 mm.

With the use of coded jumpers and a potentiometer, it is possible to adjust the display range of the instrument.

The same method can be used to set the starting point of the measuring range.

This model is especially suited for display originating from measurement transducers.

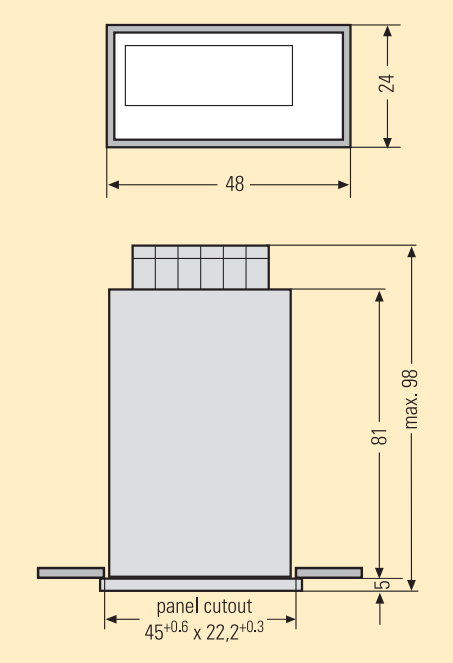

Characteristic Values, DIGEM 48 x 24 AK5

Display

Type	7 Segment LED
Display Colour	red, optionally green
Character Height	approx. 8 mm
Display Range	– 1 999 ... 1 999 option: ± 19 990
Polarity	"–" is displayed automatically
Decimal Point	fixed
Overflow Display	"1 ..."

Measuring Ranges

Direct Voltage	± 200 mV to ± 50 V
Direct Current	± 200 µA to ± 200 mA
Error Limits	± (0,05 % + 2 digits) [with option: ± 19 990 ± (0,05 % + 20 digits)]
Error Limits	< 100 ppm / °C
Offset Drift	< 0,2 digits / °C
Warm-up Time	approx. 1 min.

Power Supply

	18 ... 36 V DC 24 V AC 50 / 60 Hz

A-D Conversion

Conversion Method	dual slope
Integration Time	approx. 100 ms
Measurements / second, typical	3: Response time for the overall instrument is greater depending upon the filter at the measuring input. It amounts to approx. 1 second.

Ambient Conditions

Operating Temperature	0 ... + 50 °C
Storange Temperature	– 20 ... + 70 °C
Relative Humidity	max. 85 %
Contamination Level	2
Surge Voltage Category	II

Casting

Protection	front panel: IP 50 rear panel: IP 20
Bezel	black matt; optionally grey, pebble grey or light grey
Installation Depth	max. 98 mm (without connector)
Weight	0.11 kg
Terminals	screw terminal blocks

DIGEM 96 x 24 B5

4 Place Digital Indicator
Type A1375

The modular DIGEM 96 x 24 B5 digital indicator is a high precision panel meter with a programmable display range.

The instrument can be used for multiple measuring tasks, depending upon the installed measuring module. These tasks include:

- Direct voltage
- Direct current
- Alternating voltage
- Alternating current
- Temperature

The display range and decimal point can easily be adjusted for the respective measuring tasks.

It is also possible to make subsequent adjustments on site.

The measured values are processed by a microcomputer and displayed on a 7-segment display unit.

The lower and upper display range values can be adjusted with the keys on the front of the panel.

The selected parameters can be protected from unauthorised adjustments through an external contact on the back of the instrument.

Each instrument is equipped with a control input which allows for the storage of display values to memory, and which freezes the current display. The measuring cycle is not influenced by this function.

In the case of the non-programmable variant, the settings are preset at manufacturing time. It is thus only possible to make subsequent changes at the factory.

The unit of measure for the measured quantity is indicated with a small tab that is inserted into a pocket behind the faceplate.
This can be inserted after installation.

- Front panel dimensions 96 x 24 mm
- Display range – 1 999 … 9 999
- Optimally adaptable to respective measuring tasks through measuring modules
- Programmable, configuration extremely easy
- Power supply electronically isolated from measuring circuits
- Also available with auxiliary power for 2-wire measuring transducers
- Quick installation with mounting tab
- Also available as non-programmable instrument

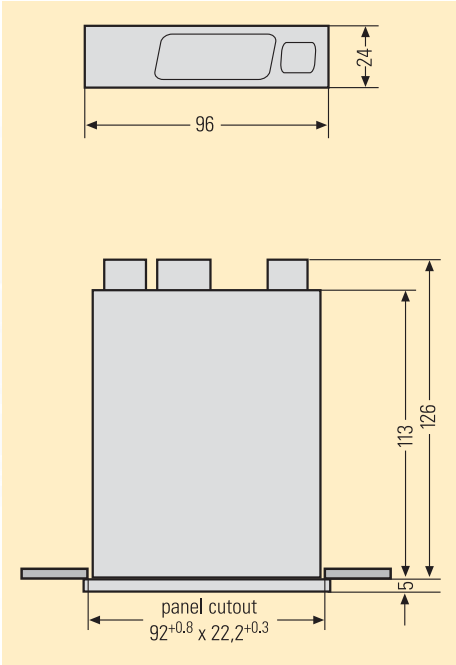

Characteristic Values, DIGEM 96 x 24 B5

Display

Type	7 Segment LED
Display Colour	red
Character Height	14 mm
Display Range	– 1 999 ... 9 999
Polarity	"–" is displayed automatically
Decimal Point	programmable or fixed
Overflow Display	blinking – top dash

Measuring Ranges

Direct Voltage	± 60 mV to ± 300 V
Direct Current	± 2 mA to ± 200 mA 0 ... 20 mA 4 ... 20 mA with power supply for 2-wire transducer
Alternating Voltage	0 ... 700 V
Alternating Current	0 ... 200 mA, 0 ... 1 A / 5 A
TRMS Voltage	0 ... 700 V
TRMS Current	0 ... 200 mA, 0 ... 1 A / 5 A
Crest Factor	6 (additional 0,5 % of reading)
Temperature	Pt100 – 200 ... + 800 °C

Power Supply

90 ... 230 V AC 50 / 60 Hz
and 90 ... 260 V DC
or
24 V AC 50 / 60 Hz
and 18 ... 36 V DC

Ambient Conditions

Operating Temperature	0 ... + 50°C
Storage Temperature	– 20 ... + 70°C
Contamination Level	2
Overvoltage Category	II

Casing

Protection	front panel: IP 54 rear panel: IP 20
Front Panel frame color	black
Weight	0.21 kg
Installation	quick mounting tabs
Terminals	screw terminal blocks

DIGEM 96 x 24 BK5

3.5 or 4.5 Place Digital Indicator with LED Display Type A1275

- Front panel dimensions 96 x 24 mm
- Red or green LED display, 14 mm high
- Max. display range, depending on model, ± 1 999 and ± 19 999
- Can be optimally adapted to required measurement task with various measurement modules
- Power supply is electronically isolated from measuring circuit
- Also available with auxiliary power for 2-wire measuring transducers

The digital display measuring instrument, DIGEM 96 X 24 BK5 is suited for general use in industrial environments and is optimally equipped for the respective measurement tasks by means of modules on the measuring inputs.

This instrument series contains modules for the following measurement tasks:

- Direct current and voltage measurements
- Direct current 4 … 20 mA with auxiliary power for 2-wire measuring transducers
- Alternating current and voltage measurements, sinusoidal
- Alternating current and voltage measurements, TRMS
- Temperature measurements

The DIGEM 96 X 24 BK5 consists of a precision DC voltmeter that can be adjusted to the required measuring task by the installed measuring module.

A suitable measuring module is fitted to each instrument. This is detailed on the serial plate.

The power supply is electronically isolated from the measuring circuit and amounts to, depending on the model, 90…230 V AC or 18…36 V DC / 24 V AC.

The extra functions, display hold, segment test and brightness control are all included in each instrument. The inputs for the control of these functions are electronically connected to the meter input.

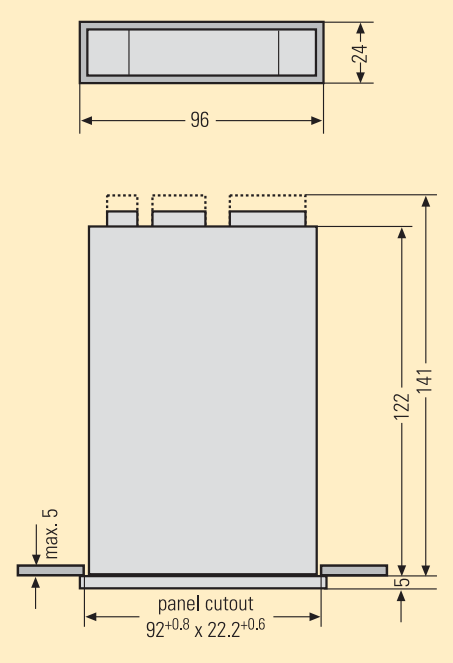

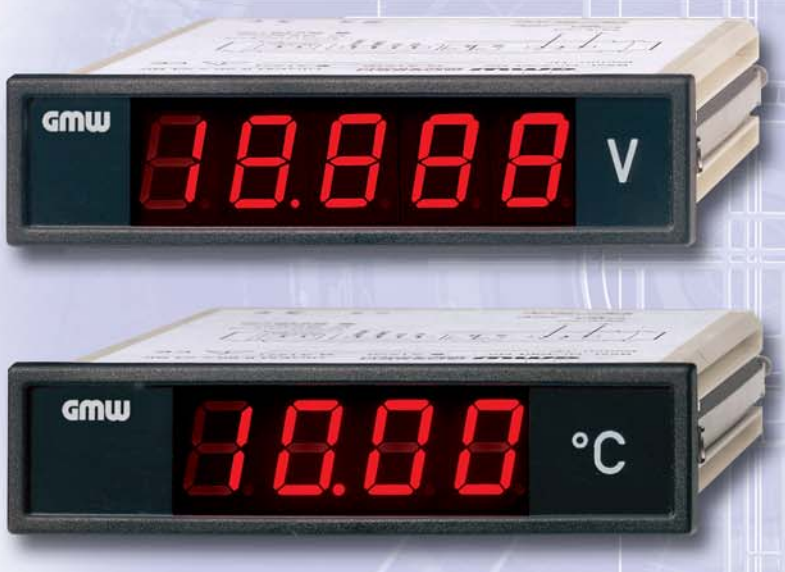

Characteristic Values, DIGEM 96 x 24 BK5

Display

Type	7 Segment LED
Display Colour	red, optionally green
Character Height	14 mm
Display Range	3½ digit ± 1 999 4½ digit ± 19 999
Polarity	"–" is displayed automatically
Decimal Point	internally fixed
Overflow Display	3½ digit: "1...." 4½ digit : display blinking

Measuring Range

Direct Voltage	± 60 mV to ± 300 V
Direct Current	± 2 mA to ± 200 mA 0 ... 20 mA 4 ... 20 mA with power supply for 2-wire transducer
Alternating Voltage	0 ... 2 V to 0 ... 250 V
TRMS Voltage	0 ... 2 V to 0 ... 250 V
Alternating Current	0 ... 200 mA, 0 ... 1 A / 5 A
TRMS Current	0 ... 200 mA, 0 ... 1 A / 5 A
Temperature	Pt100 – 50 ... 199,9°C and – 200 ... 800°C

Power Supply

90 ... 230 V AC 50 / 60 Hz
or
18 ... 36 V DC / 24 V AC

Ambient Conditions

Operating Temperature	0 ... + 50 °C
Storage Temperature	– 20 ... + 70 °C
Relative Humidity	max. 85%
Contamination Level	2
Overvoltage Category	II

Casing

Protection	front panel: IP 50 rear panel: IP 20
Material	polycarbonate
Bezel	black, optionally grey, light grey or pebble grey
Installation Depth	max. 141 mm
Weight	max. 0.22 kg
Installation	Metal slider
Terminals	screw terminal blocks option: flat plug

The DIGEM 96 x 24 S5 is a high precision panel meter, ideally suited for use in the DC Current tasks (option D) or the DC Voltage tasks (option S).

The available measurement ranges consists of standard signals, so that stock keeping can be reduced.

This universal implementation indicator can be interfaced with different auxiliary power supplies.

The casing has a very shallow installation depth, even at a power supply of 230 V AC.

The display range pre-selection is accomplished by means of clearly arranged coded jumpers at the back of the case.

The zero point and final value can be adjusted with a potentiometer

The instrument can optionally be supplied with a brightness control and a HOLD-digital signal.

DIGEM 96 x 24 S5

3.5 Place Digital Indicator with LED Display Type A1215

- Front panel dimensions 96 x 24 mm
- Red or green LED display, 14 mm high
- Measurement ranges changeable via jumpers
- Zero point and final value adjustable
- IP 54 protection at front panel
- Installation depth 72 mm

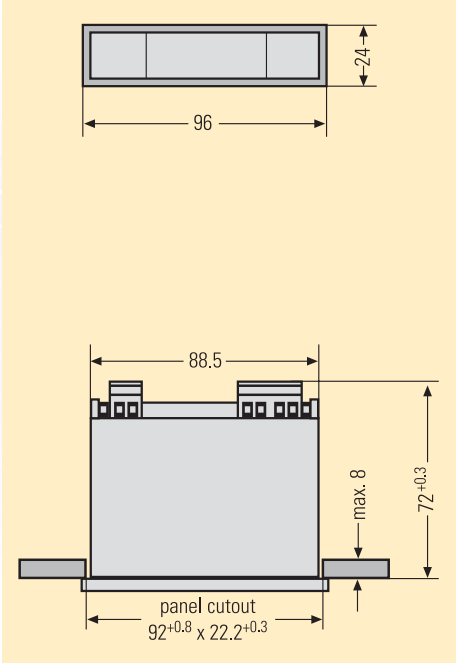

Characteristic Values, DIGEM 96 x 24 S5

Display

Type	7 Segment LED
Display Colour	red, optionally green
Character Height	14 mm
Display Range	3½ digit ± 1 999
Polarity	"–" is displayed automatically
Decimal point	fixed
Overflow Display	"1 ..."

Measuring Ranges

Option S:	
Direct Voltage	0 ... 200 mV
	0 ... 2 V
	0 ... 20 V
	0 ... 200 V
Option D:	
Direct Current	0 ... 2 mA
	0 ... 20 mA
	4 ... 20 mA
	0 ... 200 mA

Power supply

230 V AC 50 / 60 Hz
24 V DC
5 V DC not isolated

Ambient Conditions

Operating Temperature	0 ... + 50 °C
Storage Temperature	– 40 ... + 80°C
Relative Humidity	max. 85%
Contamination Level	2
Overvoltage Category	II

Casing

Protection	front panel: IP 54 rear panel: IP 20
Bezel	black
Installation Depth	72 mm
Weight	max. 0.21 kg
Installation	srew clamp
Terminals	screw terminal blocks

DIGEM 96 x 24 MF5

5 Place Digital Indicator with Limit Values and Outputs Type A1235

- Front panel dimensions 96 x 24 mm
- Red LED display, 14 mm high
- Free scalable measurement ranges
- Up to 2 open collector outputs
- Analog output
- RS232 Interface
- IP 54 protection at front panel

The DIGEM 96 x 24 MF5 is a very compact DIN size instrument.
The wide range of additional functions built in to the DIGEM 96 x 24 MF5 makes this a universal instrument for high performance automation and measurement tasks.

The instrument can be used for multiple measuring tasks, depending upon the chosen equipment.
These tasks include:

- Direct voltage
- Direct current
- Alternating voltage
- Alternating current
- Temperature

The display range and decimal point can easily be adjusted for the respective measuring tasks, and is freely scalable. It is also possible to make subsequent adjustments on site.

The operation and parameterisation of the instrument can be adjusted with two keys, or through the interface with the PC-Software (Accessories).

The DIGEM 96 x 24 MF5 is equipped with the following functions:

- Scalability of the display with internally stored functionality
- Analog output
- Measurement value assessment
- Display formation
- Alarm configuration
- DATA logging
- Cascading and LOOP operation

The instrument is designed for applications that require monitoring and evaluation of measurement values, as well as forwarding via analog output or serial interface. This also includes 2 limit values that can be distributed over the measurement range.

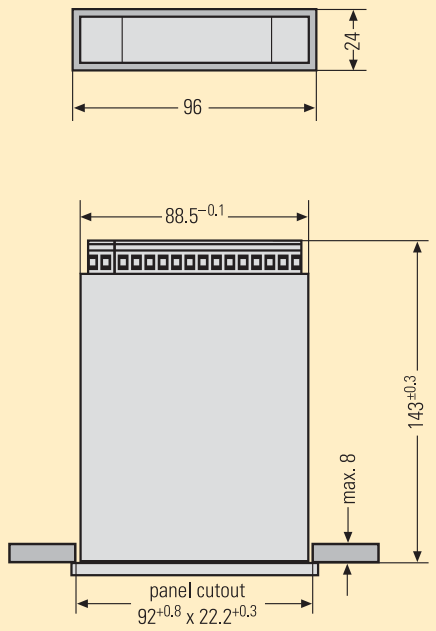

Characteristic Values, DIGEM 96 x 24 MF5

Display

Type	7 Segment LED
Display Colour	red
Character Height	approx. 14 mm
Display Range	– 19 999 ... 99 999
Polarity	"–" is displayed automatically
Decimal Point	programmable
Overflow Display	programmable, blinking

Measuring Ranges

Direct Voltage	± 200 mV to ± 650 V
Direct Current	± 20 mA to ± 200 mA 0 ... 20 mA; 4 ... 20 mA
Alternating Voltage	0 ... 650 V
Alternating Current	0 ... 200 mA
Temperature	Pt100 – 200 ... + 850 °C Connection type: 2, 3 or 4 wire Thermocouples: Type B, E, J, K, L, N, R, S, T, U – 260 ... + 1820 °C Shearing pin available

Interface

Limit value: 2 open collector
Analog output: max.
Resolution 4050 steps
RS232

Power Supply

230 V / 115 V AC 50 / 60 Hz
and 18 ... 36 V DC
Wide range power supply

Ambient Conditions

Operating Temperature	0 ... + 50 °C
Storage Temperature	– 40 ... + 80 °C
Relative Humidity	max. 85%
Contamination Level	2
Overvoltage Category	II

Casing

Protection	front panel: IP 54 rear panel: IP 20
Bezel	black
Installation Depth	143 mm
Weight	0.22 kg
Installation	screw clamp
Terminals	screw terminal blocks direct screw terminals (Measurement input)

The DIGEM 96 x 48 MF5 is a very convenient DIN-size display instrument. The wide range of extra functions built in to the DIGEM 96 x 48 MF5 makes this a universal instrument for high performance automation and measurement tasks.

The instrument can be used for multiple measuring tasks, depending upon the chosen equipment.
These tasks include:

- Direct voltage
- Direct current
- Alternating voltage (TRMS)
- Alternating current (TRMS)
- Temperature

The display range and decimal point can easily be adjusted for the respective measuring tasks, and is freely scalable.

It is also possible to make subsequent adjustments on site.

The operation and parameterisation of the instrument can be adjusted with 2 or 4 keys, or through the interface with the PC-Software (Accessories).

The DIGEM 96 x 48 MF5 can optionally be equipped with the following functions:

- Scalability of the display with internally stored functionality
- Analog output
- Measurement value assessment
- Display formation
- Alarm configuration
- DATA logging
- Cascading and LOOP operation

The instrument is designed for applications that require monitoring and evaluation of measurement values, as well as forwarding via analog output or serial interface. This also includes 4 limit values that can be distributed over the measurement range and freely assigned to the output variables.

DIGEM 96 x 48 MF5

5 Place Digital Indicator with Limit Values and Outputs Type A1245

- Front panel dimensions 96 x 48 mm
- Red LED display, 14 mm high
- Free scalable measurement ranges
- Up to 2 open collector outputs and optionally 4 Relays
- Analog output
- RS232 or RS485 Interface
- IP 54 protection at front panel

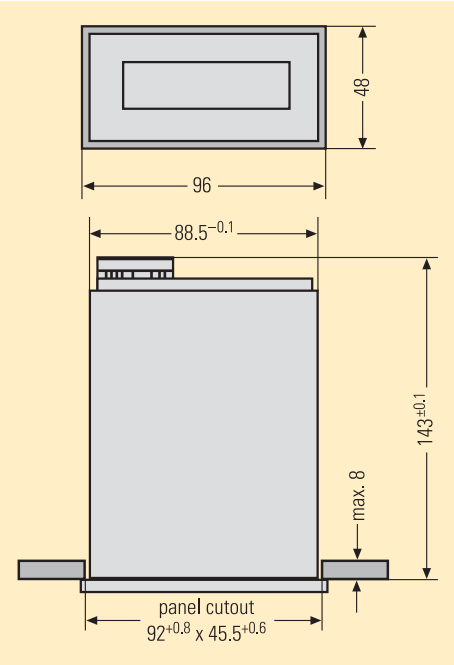

Characteristic Values, DIGEM 96 x 48 MF5

Display

Type	7 Segment LED
Display Colour	red
Character Height	approx. 14 mm
Display Range	– 19 999 ... 99 999
Polarity	"–" is displayed autom.
Decimal Point	programmable
Overflow Display	programmable, blinking

Measure Ranges

Direct Voltage	± 200 mV to ± 650 V
Direct Current	± 20 mA to ± 200 mA 0 ... 20 mA; 4 ... 20 mA
Alternating Voltage	0 ... 650 V
Alternating Current	0 ... 200 mA
TRMS Measurement	Crest factor 4 (max. peak values + 50 % of measurement value) Frequency influence: 5 ... 5000 Hz – 0,1 % to max. – 5 %
Temperature	Pt100 – 200 ... + 850 °C Connection type: 2, 3 or 4 wire Thermocouples: Type B, E, J, K, L, N, R, S, T, U – 260 ... + 1820 °C Shearing pin available

Interface

Limit value: max. 4 relays (opt.)
or 2 open collector outputs
Analog output:
max. Resolution 4050 steps
RS232 or RS485

Power Supply

230 V / 115 V AC 50 / 60 Hz
18 ... 36 V DC / 24 V DC
18 ... 36 V DC and 230 V / 115 V AC
Wide range power supply

Ambient Conditions

Operating Temperature	0 ... + 50 °C
Storage Temperature	– 40 ... + 80 °C
Relative Humidity	max. 85%
Contamination Level	2
Overvoltage Category	II

Casing

Protection	front panel: IP 54 rear panel: IP 20
Bezel	black
Installation Depth	143 mm
Weight	0.38 kg
Installation	screw clamp
Terminalls	screw terminal blocks direct screw terminals (Measurement input)

DIGEM 96 x 48 B5

4 Place Digital Indicator
Type A1385

- Front panel dimensions 96 x 48 mm
- Display range – 1 999 … 9 999
- Can be optimally adapted to required measurement task with various measurement modules
- Two separately adjustable limit values (option)
- Extremely easy programming
- Power supply is electronically isolated from measuring circuit
- Also available with auxiliary power for 2-wire measuring transducers
- Casing suitable for grid mounting
- Quick installation with mounting slider

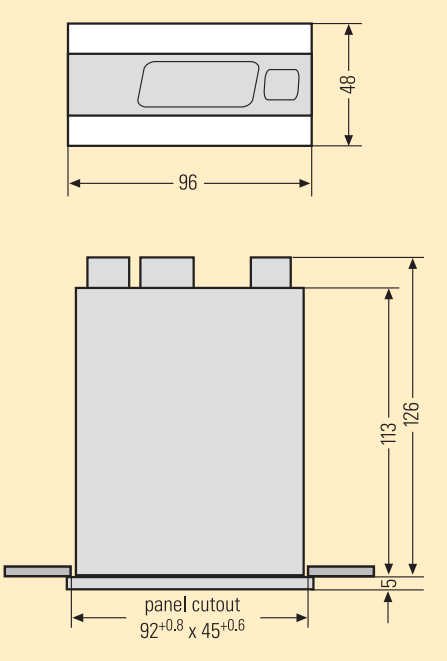

The modular DIGEM 96 x 48 B5 installation measurement instrument is extremely easy to program.

The instrument can be used for multiple measuring tasks, depending upon the installed measuring module. These tasks include:

- Direct voltage
- Direct current
- Alternating voltage
- Alternating current
- Temperature

The display range can be adapted for the 4 … 20 mA and 0 .. 20 mA measuring ranges without a calibrator, even after installation of the instrument.

The measuring instrument is thus also suitable for applications that require frequent, on-site adjustments to the display.

The DIGEM 96 x 48 B5 is a high precision DC voltmeter, which is adapted to the required measuring task by the installed measuring module.

The measured values are processed by a microcomputer and displayed on a 7-segment display unit.

Upper and lower display range values, relay switching performance, limit values and hysteresis can all be adjusted with the front panel keys.

The selected parameters can be protected against unauthorised alteration with an external contact at the back of the instrument.

If limit values need to be adjusted during operation, protection can be disabled.

Each instrument is equipped with a control input which allows for the storage of display values to memory, and which freezes the current display. The measuring cycle is not influenced by this function.

Characteristic Values, DIGEM 96 x 48 B5

Display

Type	7 Segment LED
Display Colour	red
Character Height	14 mm
Display Range	– 1 999 ... 9 999
Polarity	"–" is displayed automatically
Decimal Point	programmable
Overflow Display	blinking – top dash

Measuring Ranges

Direct Voltage	± 60 mV to ± 300 V
Direct Current	± 2 mA to ± 200 mA and 0 ... 20 mA 4 ... 20 mA with power supply for 2-wire transducer
Alternating Voltage	0 ... 2 V to 0 ... 700 V
Alternating Current	0 ... 200 mA, 0 ... 1 A / 5 A
TRMS Voltage	0 ... 700 V
TRMS Current	0 ... 200 mA, 0 ... 1 A / 5 A
Crest factor	6 (additional 0,5 % of measurement value)
Temperature	Pt100 – 200 ... + 800 °C

Power Supply

230 V / 115 V AC 50 / 60 Hz
or
18 ... 36 V DC / 24 V AC

Ambient Conditions

Operating Temperature	0 ... + 50 °C
Storage Temperature	– 20 ... + 70 °C
Contamination Level	2
Overvoltage Category	II

Casing

Protection	front panel: IP 54 rear panel: IP 20
Bezel	black
Weight	0.3 kg
Installation	quick mounting tabs
Terminals	screw terminal blocks

Display ranges can easily be adjusted with coded jumpers and potentiometer.

These measuring instruments can be used for all industrial applications thanks to their robust metal casings.

Measuring ranges are preset at the factory in accordance with the respective measuring task.

Depending on the model, the following measuring ranges are available:

- 4 … 20 mA with auxiliary power for 2-wire measuring transducer
- Direct current and direct voltage measurement
- Alternating voltage measurement
- Alternating current measurement in combination with current transformer
- Temperature measurement
- Frequency measurement

Display range pre-selection is accomplished by means of clearly arranged coded jumpers inside the instruments.

The corresponding potentiometers for fine adjustment can be accessed by removing the display filter from the front panel.

These measuring instruments are thus suitable for applications that require on-site display range adjustments.

Complete scaling within the 4 … 20 mA measuring range can be accomplished only with the standard 4 mA signal.

DIGEM 96 x 48 AK5

3.5 Place Digital Indicator
Type A1065

- Robust metal casing
- Power supply electrically isolated from measuring circuit
- Also available with auxiliary power for 2-wire measuring transducers
- Display range max. ± 1 999

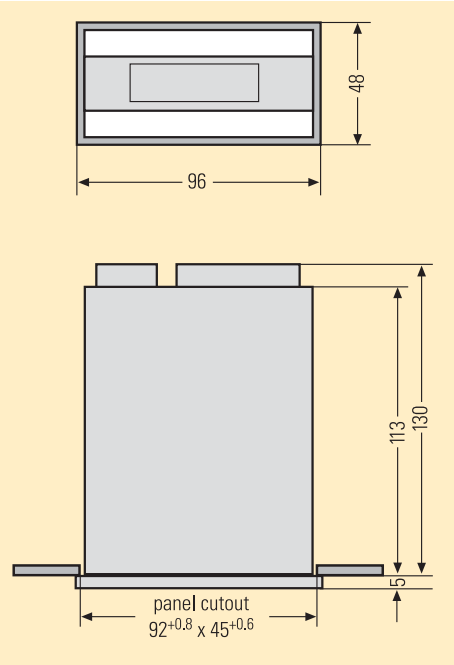

Characteristic Values, DIGEM 96 x 48 AK5

Display

Type	7 Segment LED
Display Colour	red, optionally green
Character Height	approx. 14 mm
Display Range	± 1 999
Polarity	"–" is displayed automatically
Decimal Point	internally adjustable
Overflow display	blinking – top dash

Measuring Ranges

Direct Voltage	± 200 mV to ± 300 V ± 60 mV; ± 150 mV and ± 300 mV
Direct Current	± 200 µA to ± 200 mA 0 ... 20 mA 4 ... 20 mA with power supply for 2-wire transducer
Alternating Voltage	0 ... 199,9 V; 0 ... 700 V
TRMS Voltage	0 ... 100,0 V; 0 ... 700 V
Alternating Current through current transformer	0 ... 1 A / 5 A
TRMS Current	0 ... 1 A / 5 A
Frequency	0 ... 500,00 Hz
Temperature	Pt100 0 ... 199,9 °C and – 200 ... 800 °C
Thermocouples	Typ J 0 ... 760 °C or Typ K 0 ... 1260 °C

Power Supply

230 V AC 50 / 60 Hz
115 V AC 50 / 60 Hz
24 V DC / AC

Ambient Conditions

Operating Temperature	0 ... + 50 °C
Storage Temperature	– 20 ... + 70 °C
Relative Humidity	max. 85 %
Contamination Level	2
Overvoltage Category	II

Casing

Protection	front panel: IP 50 rear panel: IP 20
Bezel	black
Weight	0.4 kg
Installation	screw clamp
Terminals	flat plug or screw terminal blocks

DIGEM 96 x 48 MB5

3.5 Place Digital Indicator
Type A1225

- Front panel dimensions 96 x 48 mm
- Red or green LED display, 14 mm high
- Wide, freely selectable, setting range
- Decimal point and final value adjustable

The DIGEM 96 x 48 MB5 is an overview display in DIN-casing that allows for a wide measurement range for current and voltage.

This instrument is available in two models:

- as option F for direct voltage or
- as option AC for alternating voltage and alternating current

The final value of the display can be adjusted in range 1:10 for DC measurements. This makes the DIGEM 96 x 48 MB5 suitable for many measuring tasks.

The wide setting range guarantees an uncomplicated adjustment to the measured variable.

Display and measurement range pre-selection is accomplished by means of a DIP switch, placed at the back of the case.

The decimal point and final values are also adjustable with this DIP switch.

The instrument can optionally be equipped with a HOLD digital signal.

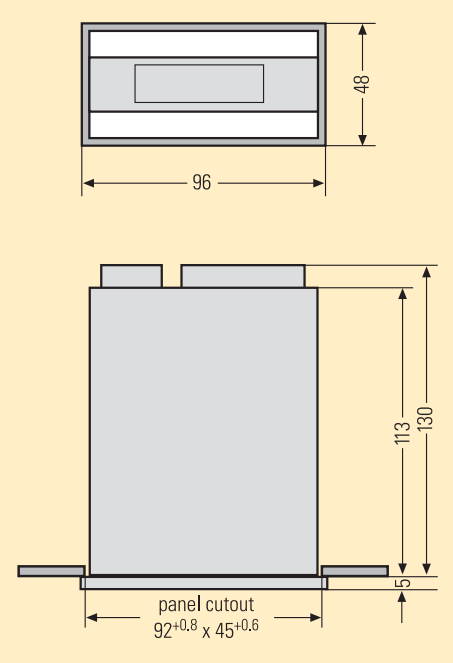

Characteristic Values, 96 x 48 MB5

Display

Type	7 Segment LED
Display Colour	red, optionally green
Character Height	14 mm
Display Range	3½ digit ± 1999
Polarity	"–" is displayed automatically
Decimal Point	fixed
Overflow Display	"1 ..."

Measuring Ranges

Option F:	
Direct Voltage	0 ... 2 V
	0 ... 20 V
	0 ... 200 V
	0 ... 500 V
Option AC:	
Alternating Voltage	0 ... 500 V
Alternating Current	0 ... 1 A
	0 ... 5 A

Power Supply

230 V / 115 V AC 50 / 60 Hz
24 V AC 50 / 60 Hz
24 V DC

Ambient Conditions

Operating Temperature	0 ... + 50 °C
Storage Temperature	– 40 ... + 80 °C
Relative Humidity	max. 85%
Contamination Level	2
Overvoltage Category	II

Casing

Protection	front panel: IP 50
	rear panel: IP 20
Bezel	black
Installation Depth	130 mm
Weight	max. 0.5 kg
Installation	screw clamp
Terminals	screw terminal blocks

The DIGEM 96 x 48 SN5 is a standard display in DIN-casing that allows for a wide adjustable measurement range for current and voltage.

The DIGEM 96 x 48 SN5 is perfectly suited for interfacing with different auxiliary powers because of its wide range power packs (option).

The final value can be adjusted in the range 1:3. This feature, including the high level of protection, makes measurement tasks in robust environments possible.

The display range and decimal point pre-selection is accomplished by means of clearly arranged coded jumpers at the back of the case.

The initial and final values are adjustable with potentiometers located at the front of the instrument.

DIGEM 96 x 48 SN5

3.5 Place Digital Indicator
Type A1255

- Front panel dimensions 96 x 48 mm
- Red or green LED display
- Digit height: 14 mm or 20 mm
- Wide, freely selectable, setting range
- Decimal point and final value adjustable
- Brightness control
- Zero point offset
- IP 54 protection at front panel

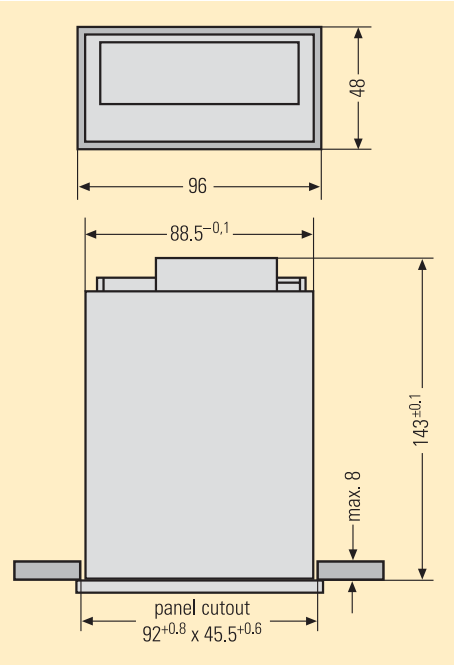

Characteristic Values, DIGEM 96 x 48 SN5

Display

Type	7 Segment LED
Display Colour	red, optionally green
Character Height	14 mm or 20 mm
Display Range	3½ digit ± 1999
Polarity	"–" is displayed automatically
Decimal Point	externally selectable
Overflow Display	"1 ..."

Measuring Ranges

Direct Voltage	± 1 V to ± 300 V
Direct Current	0 ... 1 mA
	0 ... 20 mA
	0 ... 200 mA

Power Supply

230 V / AC 50 / 60 Hz or
115 V / AC 50 / 60 Hz or
24 V AC 50 / 60 Hz or
18 ... 36 V DC and
230 V/115 V AC 50 / 60 Hz
Wide range power supply

Ambient Conditions

Operating Temperature	0 ... + 50 °C
Storange Temperature	– 40 ... + 80 °C
Relative Humidity	max. 85%
Contamination Level	2
Overvoltage Category	II

Casing

Protection	front panel: IP 54
	rear panel: IP 20
Bezel	black
Installation Depth	143 mm
Weight	max. 0.5 kg
Installation	screw clamp
Terminals	screw terminal blocks

DIGEM 96 x 48 CK5

Digital Indicator with Limit Value and LED Display Type A1265

- Front panel dimensions 96 x 48 mm
- Max. display range - 19 999 to + 32 765
- Flexible through modular plug-in system
- Easy adjustment
- As an option max. 4 limit values possible
- Adjustable to client specific characteristic curve
- Addition, subtraction of two measurement values
- Multiplication, division of two measurement values
- Automatic TARE function
- Automatic alignment at pressure measurement
- Storage of min./max. measurement values
- Power supply is electronically isolated from the other circuits
- Also available with auxiliary power for 2-wire measuring transducers
- RS232 and RS485 interface (optionally)
- Analog output (optionally)
- Casing suitable for grid mounting

The DIGEM 96 x 48 CK5 is a precision, modular panel meter.

The instrument can be equipped with a multitude of various measuring modules for a variety of measuring tasks.

Scale graduations and set points are easy to adjust with the keys at the front panel, even after the instrument has been installed.

Furthermore, the extensive additional functions expand the range of applications so that the measuring instruments can be adapted optimally to the required task.

These instruments can be equipped for the following measurement tasks:

- Direct current and voltage measurements
- Alternating current and voltage measurements
- Temperature measurements
- Frequency and RPM measurements
- Pressure measurements
- Pulse counter
- Display in cos φ
- Non-linear input quantities

The instrument is optionally also designed for applications which require monitoring and evaluation of measurement values, as well as forwarding these via analog output or serial interface.

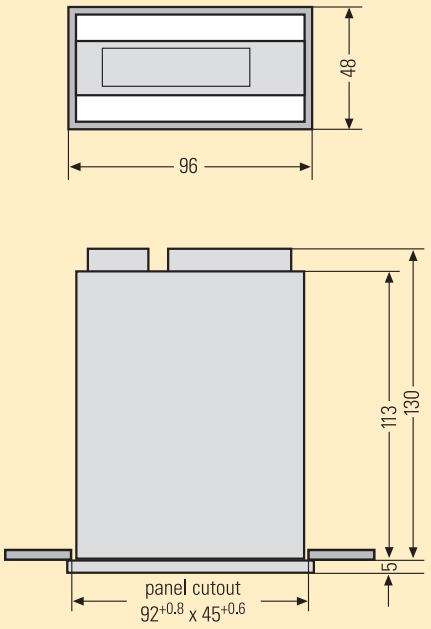

Characteristic Values, DIGEM 96 x 48 CK5

Display

Type	7 Segment LED
Display Colour	red, optionally green
Character Height	approx. 14 mm
Display Range	– 19 999 ... 32 765
Polarity	"–" is displayed automatically
Decimal point	programmable
Overflow Display	blinking – top dash

Measuring Ranges

Direct Voltage	± 60 mV to ± 300 V
Direct Current	± 2 mA to ± 200 mA 0 ... 20 mA 4 ... 20 mA with power supply for 2-wire transducer
Alternating Voltage	0 ... 700 V
Alternating Current	0 ... 200 mA; 0 ... 1 A / 5 A
TRMS Voltage	0 ... 700 V
TRMS Current	0 ... 200 mA; 0 ... 1 A / 5 A
Crest Factor	6 (additionally 0,5 % of Measurement value)
Temperature	Pt100 – 200 ... + 800 °C – 328 ... + 1473 °F Thermocouples Type J, K, R, S 0 ... + 1.600°C – 310 ... + 2 300 °F
Resistance	0 ... 10 000 Ω
Frequency	0 ... 200,00 kHz
Resolution	max. 0,1 Hz
Pressure	min. 2 mV / V max. 20 mV / V
Pulse Counter	up-counter, down-counter

Interface

Limit value: max. 4 relays
Analog output (optionally)
Serial Interface (optionally)
RS232 or RS485

Power Supply

90 ... 230 V AC 50 / 60 Hz
90 ... 260 V DC or
18 ... 36 V DC /
24 V AC 50 / 60 Hz

Ambient Conditionns

Operating Temperature	0 ... + 50 °C
Storage Temperature	– 20 ... + 70 °C
Relative Humidity	max. 85 %
Contamination Level	2
Overvoltage Category	II

Casing

Protection	front panel: IP 40 rear panel: IP 20
Bezel	black
Weight	0.9 kg
Installation	mounting tabs
Terminals	screw terminal blocks

DIGEM 144 x 72 C5

Digital Indicator with Limit Value and LED Display Type A1005

The DIGEM 144 x 72 C5 is suited for applications that require more than two limit values, or where simultaneous use of outputs and interfaces is necessary.

The modular measuring input can be equipped for the following measuring tasks:

- Direct current and voltage measurements
- Alternating current and voltage measurements
- Temperature measurements
- Frequency and RPM measurements
- Pulse counter
- Display in cos φ
- Non-linear input quantities

The MESSCONTACTER model allows for the configuration of four limit values. Alarm messages are read out via four relays. Alarms are also signalled with LED's.

Additional features of this model include.

- Adjustable switching hysteresis
- Adjustable limit value time delay
- Storage of an alarm message to memory

- Front panel dimensions: 144 x 72 mm
- Red or green LED display
- Display range: ± 19 990 digits for current and voltage measurement

- Adaptation to customer specific characteristic
- Modular connectors for flexible use
- Calibration and special functions can be selected with keys
- Power supply electrically isolated from measuring circuit
- IP 54 protection at front panel
- Up to 4 limit values
- Analog output (option)
- BCD output (option)
- RS232 and RS485 (option) interface
- Suitable for installation into grid systems

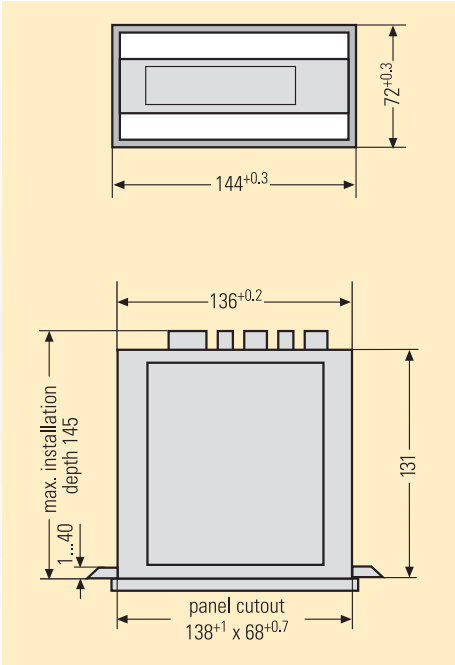

Characteristic Values, DIGEM 144 x 72 C5

Display

Type	7 Segment LED
Display Colour	red, optionally green
Character Height	approx. 20 mm
Display Range	max. ± 19 999
Polarity	"–" is displayed automatically
Decimal Point	programmable
Overflow Display	blinking – top dash

Measuring Ranges

Direct Voltage	± 200 mV to ± 300 V
Direct Current	± 2 mA to ± 200 mA ± 1 A; ± 2 A 0 ... 20 mA; 4 ... 20 mA
Alternating Voltage	0 ... 500 V
Alternating Current	0 ... 200 mA
TRMS Voltage	0 ... 500 V
TRMS Current	0 ... 200 mA; 0 ... 1 A / 5 A
Crest Factor	6 (additionally 0,5 % of Measurement value)
Temperature	Pt100 – 200 ... + 800 °C – 328 ... + 1 473 °F
Resistance	0 ... 10 000 Ω
Frequency	0 ... 200,00 kHz
Resolution	max. 0,1 Hz
Pulse Counter	up-counter, down-counter

Interface

Limit value: max. 4 relays
Analog output (optionally)
BCD or analog
Serial Interface (optionally)
RS232 or RS485

Power Supply

230 V AC 50 / 60 Hz
115 V AC 50 / 60 Hz
18 ... 36 V DC / 24 V AC

Ambient Conditions

Operating Temperature	0 ... + 50 °C
Storage Temperature	– 20 ... + 70 °C
Relative Humidity	max. 85 %
Contamination Level	2
Overvoltage Category	II

Casing

Protection	front panel: IP 54 rear panel: IP 20
Bezel	black
Weight	0.8 kg
Installation	screw clamp
Terminals	screw terminal blocks

DIGEM 62 x 38 A5

3.5 Place Digital Indicator with LED or LCD Display Type A1155

- Display range: ± 1 999
- Minimal installation depth of only 26.5 mm
- 5 V supply power
- Power pack available as accessory
- Simple installation with snap fasteners

Depending on the model, these measuring instruments can be equipped with a bright LED display or a reflective LCD display.

The LCD is optionally available with additional illumination (transflective).

The instrument is suited for the measurement of direct current or direct voltage.

Measuring and display ranges are preset at the factory.

The instrument requires a supply voltage of 5 V that is electrically connected to the measuring circuit.

Power packs for 18 V to 36 V DC and 4.75 V to 15 V are available as accessories.
These power packs are snapped onto the rear panel of the measuring instrument.

Accessories

Power Packs for the DIGEM 62 x 38 A5

Power Supply	electrically isolated from measuring circuit
Test Voltage	500 V
Primary Voltage	depending on model 4.75 V ... 15 V DC or 18 ... 36 V DC
Secondary Voltage	5 V ± 5 %
Load Capability	max. 250 mA
Residual Ripple	< 200 mV
Power Consumption at Max. Load	3 W
Terminals	14 pole plug connector

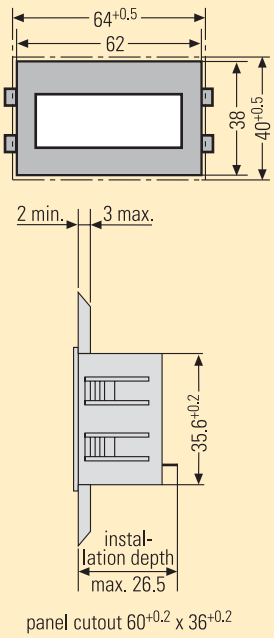

Characteristic Values, DIGEM 62 x 38 A5

Display

Type	7 Segment LED with 14 mm character height or LCD reflective with 12.7 mm character height
Polarity	"–" is displayed automatically
Decimal Poit	externally adjustable or fixed
Overflow Display	"1 ..."

Mesuring Ranges

Direct Voltage	± 2 V to 200 V and additionally ± 200 mV
Direct Current	± 200 µA to ± 200 mA
Auxiliary Power	5 V ± 5 %

Ambient Conditions

Operating Temperature	0 ... + 50 °C
Storage Temperature	– 20 ... + 70 °C
Relative Humidity	max. 85%

Casing

Protection	front panel: IP 50 rear panel: IP 0
Installation	snap mounting
Terminals	plug connector, appropriate plug is included with instrument

Depending on the model, these measuring instruments can be equipped with a bright LED display or a reflective LCD display.

The instruments have been especially equipped to meet the requirement of the equipment manufacturers.

Connection is accomplished with a 14-pin plug connector.
The required plug is included with the instrument.

The instrument has been designed for the measurement of direct current and direct voltage.

The measuring and display ranges are preset at the factory in accordance with the required measuring task.

The power supply is 5 V ± 5 % and is electrically connected to the measuring input.

By removing a link, the measuring instrument can have a differential input, in which case no more than + 2 V may be applied between the measurement input and the 0 V power supply terminal.

DIGEM 62 x 38 B5

4.5 Place Digital Indicator with LED or LCD Display Type A1175

- Display range: ± 1 999
- Installation depth of max. 33 mm
- 5 V supply power
- Simple installation with snap fasteners

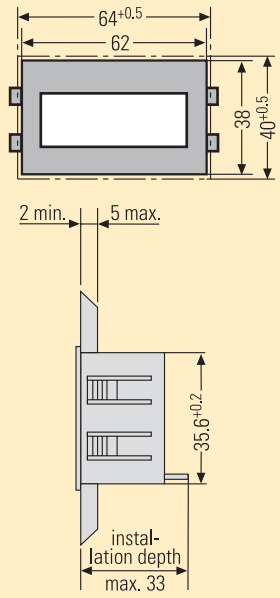

panel cutout $60^{+0.2}$ x $36^{+0.2}$

Characteristic Values, DIGEM 62 x 38 B5

Display

Type	7 Segment LED with 10 mm character height or LCD reflective with 10 mm character height
Polarity	"–" is displayed automatically
Decimal Point	externally adjustable
Overflow Diplay	blinking

Measuring Ranges

Direct Voltage	± 2 V to 200 V
Direcz Current	± 200 µA to ± 200 mA
Auxiliary Power	5 V ± 5 %

Ambient Conditions

Operating Temparature	0 ... + 50 °C
Storage Temparature	– 20 ... + 70 °C
Relative Humidity	max. 85%

Casing

Protection	front panel: IP 50 rear panel: IP 0
Installation	snap mounting
Terminals	plug connector, appropriate plug is included with instrument

DIGEM 72 LCD

Digital Indicator with Graphic Display Type A1500

The DIGEM 72 LCD is a precision, flush-type measuring instrument, for general use in direct current operations.

A universally useable indicating device.

This instrument features **two measuring channels,** which can be used variably, for example: one measuring channel for display and one measuring channel to monitor the voltage of a battery.
The display and functions are custom programmed at the factory.

A special menu allows the zero point and final value as well as the display range to be adjusted at will.
One limit value can be used with measuring channel 1.

The graphic display is back-lighted and can be switched on and off by means of a key.

- 2 Measuring channels
- LCD display 128 x 64 points matrix, character size from 6 x 8 up to 16 x 32 points
- Display range selectable by menu adjustment
- Adjustable zero point and final value
- Protection at front panel IP 54
- Front measurements 72 x 72 mm
- Installation depth only 70 mm

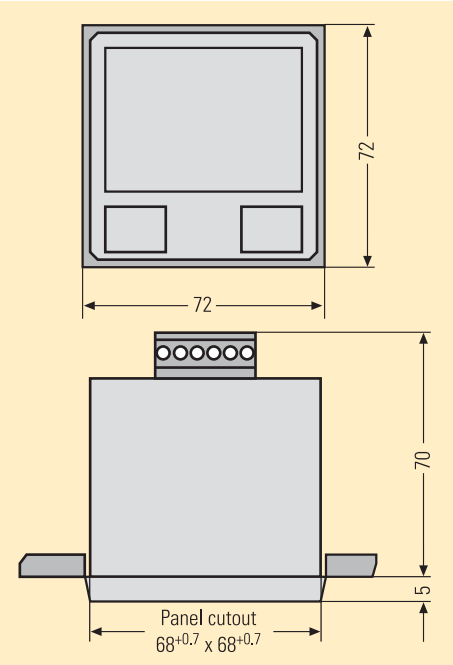

Characteristic Values, DIGEM 72 LCD

Display	
Type	LCD graphic display with back-lighting
Character Height	3.5 up to 13.5 mm
Display Range	4-places ± 9999
Polarity	"–" automatically displayed
Decimal Point	variable

Measuring Channels	2
Measuring Range	
Direct Voltage	0 ... 200 mV 0 ... 1 V 0 ... 10 V
Direct Current	0 ... 2 mA 0 ... 20 mA 4 ... 20 mA
Power Supply	3 V DC ± 10%, 5 V DC ± 10%, 12 V DC ± 10%, 15 V DC ± 10%, or 24 V DC ± 10%

Ambient Conditions	
Operating Temperature	0 ... + 50 °C
Storage Temperature	– 20 ... + 70 °C
Relative Humidity	max. 85%
Contamination Level	2
Overvoltage Category	I
Casing	
Protection Class	front IP 54 rear IP 20
Bezel	black
Installation Depth	70 mm
Weight	max. 0.21 kg
Installation	screw clamp
Terminals	screw terminal blocks

PRODUCT TABLE

Analogue Display Instuments

Measurement Transducers

Digital Panel Instruments

Electrical Equipment Testers

Indicator / Controllers

Text Displays / Printers

Bargraph Displays

Probes

Accessories

INTERNET
We look forward
to welcome you on
our website.

Datasheets and operating manuals
for the products introduced in this catalogue
can be found on our website at
Digital Panel Instruments.

Contact addresses can be found under
Agencies.

www.g-mw.de
info@g-mw.de

GOSSEN Müller & Weigert
Kleinreuther Weg 88 · D-90408 Nuremberg, Germany
Phone: +49(0)911 35 02-0 · Fax: +49(0)911 35 02-3 07
Internet: http://www.g-mw.de · e-mail: info@g-mw.de

2786700026 DRO 02/08